TS300/TA100

Wave – Solder Bath

Hirt Apparatebau UG
Wilhelm- Jerger- Straße 22
78078 Niedereschach
Phone: +49 7728 6447-0 Fax: +49 7728 -6447-28

Table of contents

1. Safety

1.1 General safety instructions

	Read the manual carefully and follow the safety instructions in this section before undertaking any actions, such as transport, storage, connection, implementation etc.
	Because devices, equipment and machines operate with a power supply and store energy either internally or externally, the instructions in this section are relevant for all users and personnel. The safety instructions for all additional devices and components must also be followed.
	Adhere to the regulations governing the prevention of accidents with laser beams.
	Adhere to the regulations governing the prevention of accidents with gantry robots.
	All work on the machine must be carried out by qualified and authorized personnel. Setup work must be done by **one** person working alone, **never by two or more** people at the same time.
	Beware of hot surfaces.
	Wear safety gloves.
	Wear safety glasses.
 	Irritant. Avoid skin contact. Health risk. Solder fumes and flux.
	Environmental hazard. Waste solder, flux and thinners are hazardous waste and should be disposed of appropriately.
	Alcohol-based flux is highly flammable.

1.1.1 Transport and storage

The machine must be transported in an upright position with the transport aids in place.
The machine must be transported in the original packaging (pallet, etc.) to the destination site. This also applies when moving or returning the machine.
Ensure that the machine is in an upright position during transport, taking its centre of gravity into account. Even slight changes in position can cause the machine to tilt over, particularly with machines with built-in gantry robots, which have a high centre of gravity.
Also ensure that the machine is positioned securely during storage.
Always adhere to the machine's temperature and humidity specifications during transport and storage.

1.1.2 Installation

The machine is designed for use in ventilated areas.
When installing, follow the specifications governing position and the use of fastening points or adjustable feet.
If there is any formation of condensation (dew) during the installation process, an acclimatization period of at least 2 hours is required before any further action is taken.
The machine should never be installed or operated in a damp environment. Ensure that no liquids come in contact with the machine.
The machine should not be installed close to heat sources.
Ensure that ventilation openings are not blocked and that air is circulating freely through the machine and its components.

1.1.3 Connection

The socket for the electric installation must be easily accessible and located near the machine.
Always ensure that the protective conductor connection to the machine is in place.
Operate only intended consumer loads from the machine's power supply.
Check to ensure that all media lines are properly connected. Always check to ensure that any process/reaction gases produced are extracted from the process chamber.
Keep connection lines as short as possible and ensure that they are laid correctly. Avoid creating trip, crush, shear and other hazards in the connection lines.
All connection work must be carried out by qualified and authorized personnel.

1.1.4 Operation

To meet the requirements for CE marking, soldering systems must be connected to an extraction system for toxic fumes. Customers who have not ordered an extraction system must connect their own extraction system to the machine.
Work on the machine in Normal and Setup modes must be carried out by authorized and qualified personnel trained for the task at hand. **Setup work on the machine must be done by 1 person working alone, never by 2 or more people at the same time**. This applies also to general operation of the machine.
Always ensure that no liquids, foreign objects or blockages get into the system.
Never tamper with the machine's safety equipment.

1.2 Safety instructions for soldering

Caution: The solder bath is designed to be operated with nitrogen gas. It should not be operated WITHOUT GAS.
Working without gas will reduce the quality of soldering (bridges, ridging, drop formation etc.) and may damage the pump unit. The guarantee for the soldering module is void if operated without gas.

1.3 Heat-up phase

The solder bath must always be enclosed in the housing to ensure that it is not freely accessible.
To prevent eruptions during the heat-up phase, heating around the melting point is at a lower output.

The machine may only be operated when all safety features are in place:
- Guard doors closed
- Emergency stop circuit is connected to the emergency stop button

The machine is equipped with doors that stop it when opened.
Caution: The solder bath pan and the area around it remain hot.

In the event of danger to persons, hit the **emergency stop button** or turn off the master switch. The emergency stop button disconnects the power supply. Unlocking the emergency stop button does not reconnect it.

Working with hot solder produces hazardous fumes. To meet the requirements for CE marking, soldering systems must be connected to an extraction system. Customers who have not ordered an extraction system must connect their own extraction system to the machine. The relevant laws and regulations apply.

When cleaning with liquids, **always** unplug the heater at the mains. The same applies when lifting or moving the pan.

The solder pans must be protected against water.

Caution: When working with the hot solder bath, always wear insulated protective gloves. Always wear protective clothing and eyewear.

2. General information

Please note that eruptions are always possible during the heat-up phase if conditions are unfavourable.

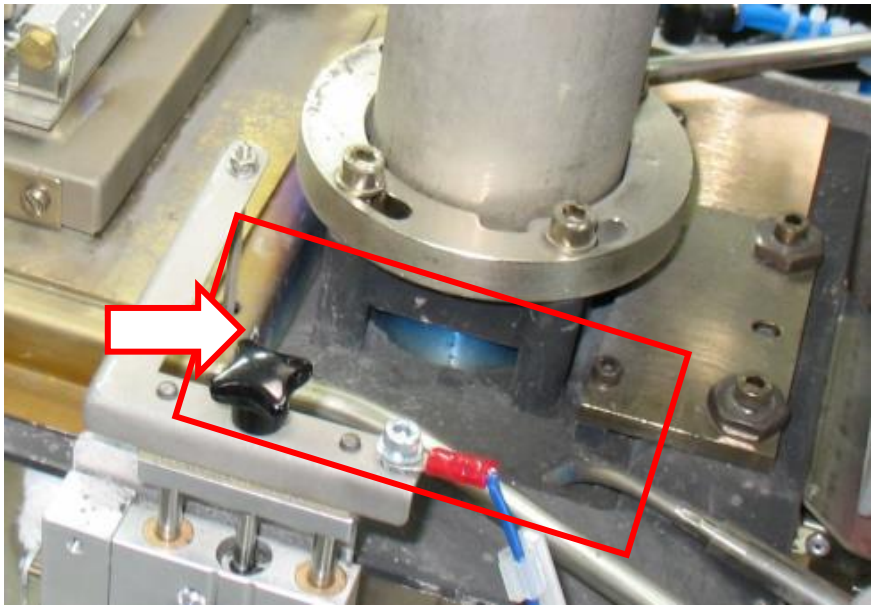

For gas solder baths, the gas hood is generally sufficient as a cover.

Do not puncture the solder surface while it is still rigid during the melting process.

The temperature sensor must be positioned correctly (the tip should extend as far as possible into the solder bath).

The wave solder bath should always be filled to the brim (solder level must always be higher than the base of the splash insert). If the solder level drops too far, there is a risk of overheating and oxidization in the pump housing.

Any pneumatic lines to be laid in the vicinity of the solder bath must be shielded against heat.

Any fire hazard posed by the wave solder bath at the installation site must be assessed.
All safety precautions applicable at the installation site must be observed.

Harmful vapors are produced during the soldering process.

Please note that all relevant and applicable laws must be observed.

3. Servicing and maintenance

For maintenance work such as oxide cleaning in the hot pan, use only titanium or V2A metal strips.
If you use other materials, the solder may be contaminated by alloying constituents deposited in the solder.

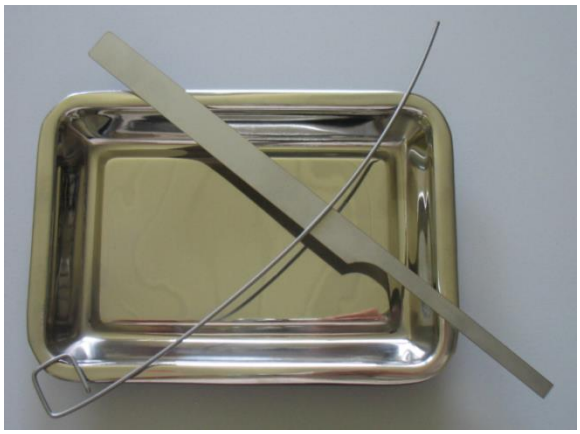

(Included in delivery)

The mechanical and pneumatic equipment in this wave solder bath is virtually maintenance free.

However, oxide formation in the area of the solder surface and the pump cannot be completely avoided.
The level of oxide formation depends on the solder, the temperature and the speed of the wave pump.
The oxide cleaning interval, including a description of the work to be done, can be found in the maintenance table.

Caution: When working with the hot solder bath, always wear insulated protective gloves. Always wear protective clothing and eyewear.

4. Maintenance work

Interval	Part/Location	Description
Daily	Clean oxide from bath surface 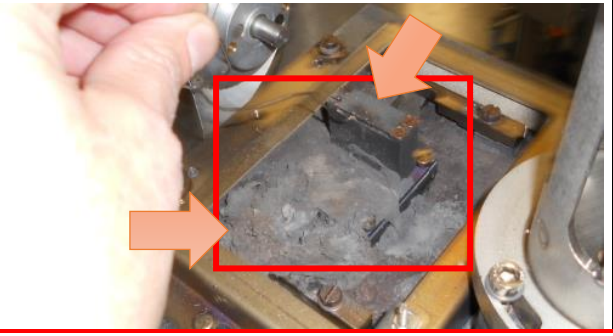	With a pair of pliers. Wear safety glasses and gloves. Use the control panel/programme to move the cover to the rear and set the rotary table to manual mode. Clear the surface of oxide and dirt with the V2A metal strips. [*1.3, 1.4 and 1.5*]
If necessary, this procedure should be carried out several times a day.		
Approx. **every 3 - 4 weeks** 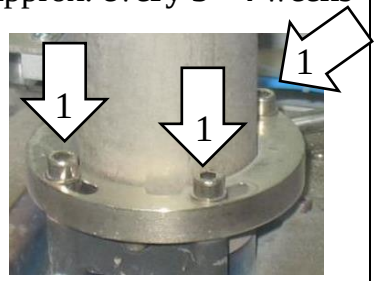 Caution: Screws (1) should only be loosened, Never remove them completely. There are spacer washers below them. [*3.20, 3.21 and 3.22*]	Clean oxide from turbine with pump housing 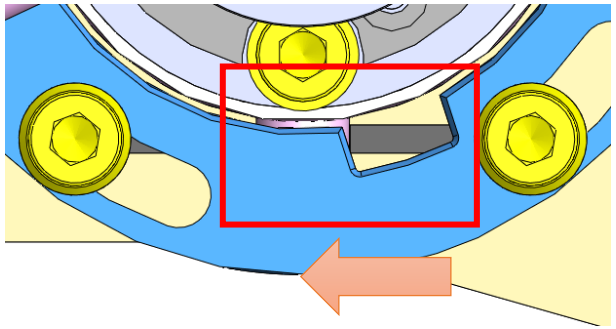	**Loosen** screws (1) 4x. Turn the clamp ring for the pump in the clockwise direction until the notch on the clamp ring and the pin on the pump housing are overlapping. Pull the pump drive with the motor up and out and let the remaining liquid solder in the support tube drain into the pan. During transport, hold the slag tray **[***1.3***]** under the cage unit **[***2.18***]**. Take care to ensure that the solder does not drip onto the screw heads and cables. Continue working on a fireproof surface. Before disassembling the pump drive, protect the heat-sensitive components of the machine against any remaining drops from the support tube and cage unit **[***2.18***]** by placing the slag tray below them **[***1.3***]**
There are two possibilities for the pump drive: either a *quick clean* or a *thorough clean.* This depends on **1)** *The amount of dirt* **2)** *How easy it is to clean* **3)** *Whether the parts are easy to reassemble.*		

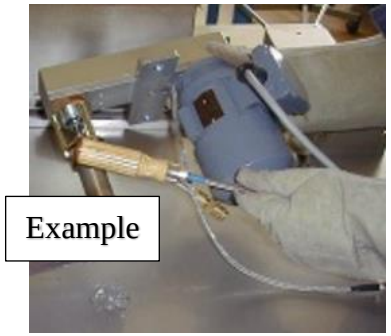

Example

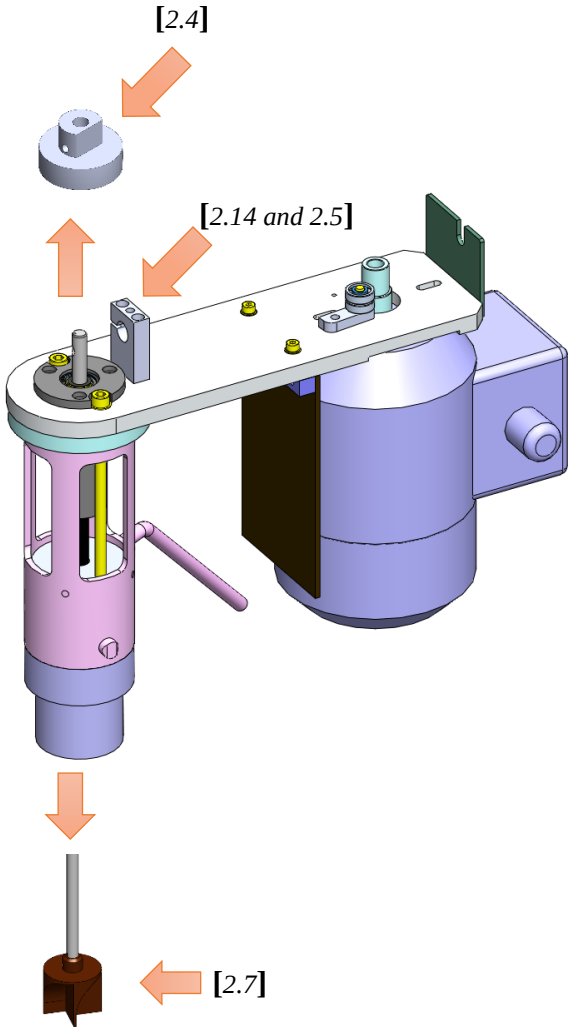

For a ***quick clean***, remove only the turbine shaft **[***2.7***]**.
To do this:

1.) Slide the rotation sensor **[***2.5***]** in the sensor holder **[***2.14***]** back far enough so that the pulley **[***2.4***]** can be removed.
2.) Remove the two headless pins **[***2.24***]** and **[***2.25***]** from the pulley **[***2.4***].**

When both pins **[***2.24, 2.25***]** have been removed, the pulley **[***2.4***]** should be easy to remove from the turbine shaft **[***2.7***]**.

Caution: This also release the turbine shaft **[***2.7***]**. This should never be let fall to the ground to prevent serious damage.

In most cases, solder residues or deposits prevent it from slipping out.
In this case, push the turbine shaft **[***2.7***]** out carefully.

Caution: Never use a steel driver, punch or similar tool.

Use only soft materials such as hardwood rods.

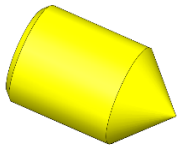

[*2.24*]

[*2.25*]

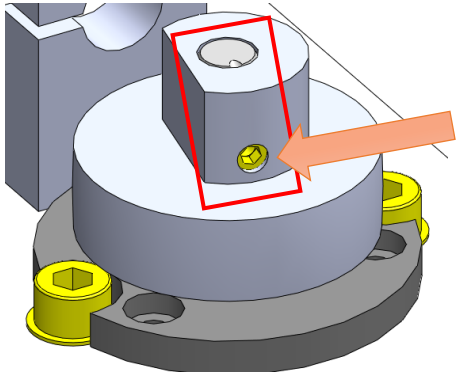

[*2.24*]

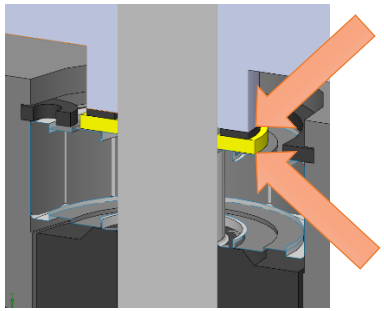

[*2.22*]

[*2.28*]

Conversely, the turbine shaft **[***2.7***]** should be easy to thread in by hand during reassembly after it has been thoroughly cleaned.
If this is not the case, check the parts for damage, such as:

1) Defects
2) Deformation
etc.

During assembly, the headless pin **[***2.24***]** must match the upper groove on the turbine shaft **[***2.7***]**.
When in the correct position, the headless pin **[***2.24***]** is screwed in, raising the turbine shaft **[***2.7***]**. When assembled correctly, the face of the turbine shaft **[***2.7***]** (surface with groove) and the upper face of the pulley **[***2.4***]** form a plane (±0.2 mm). The second headless pin **[***2.25***]** is then used to secure.

Caution: When the turbine shaft **[***2.7***]** is disassembled, ensure that the adjusting washer **[***2.28***]** and the spring washer **[***2.22***]** do not get lost.
When assembling, ensure that the order of washers is correct.

For a **thorough clean** , the steps are as follows.

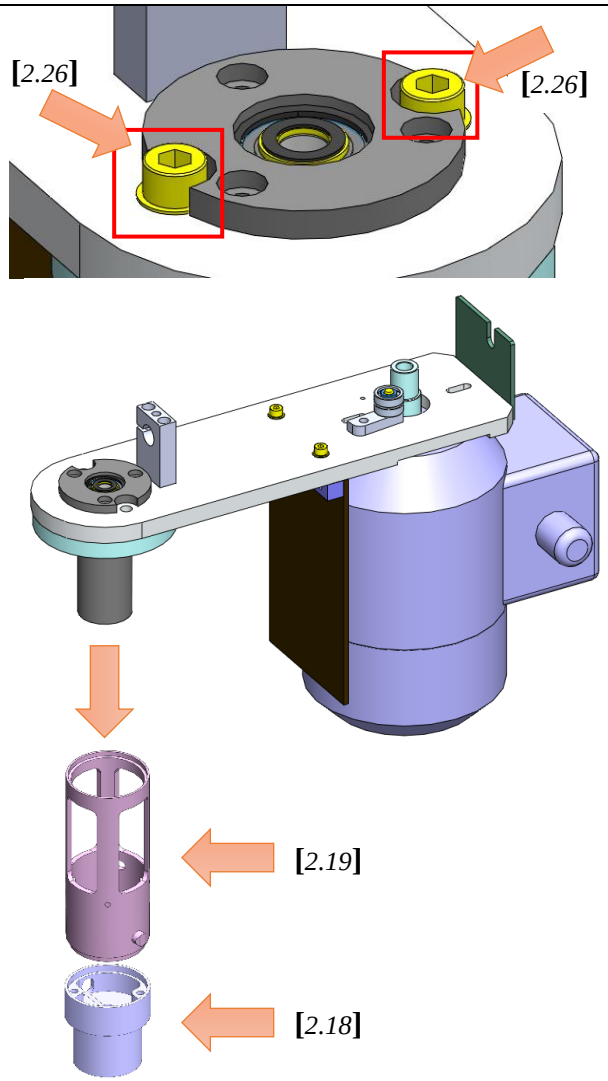

The turbine shaft **[***2.7***]** has been removed (**quick clean**)

1) Remove the two cylinder head screws **[***2.26***]** with their adjusting washers **[***2.27***]**

Caution: After unscrewing the cylinder head screws **[***2.26***]**, the support tube **[***2.19***]** and the cage unit **[***2.18***]** are loose, with nothingto stop them from falling. These should never be let fall to the ground to prevent serious damage.

If these parts do not come apart because of deposits, separate the cage unit **[***2.18***]** from the support tube **[***2.19***]** by hand and then separate the support tube **[***2.19***]** from the flange bracket **[***2.21***]**, also by hand.

Note: Deposits such as

1) Solder residues
1.) Oxide dust
2.) Condensed flux vapours
etc.

can make disassemblymore difficult.

Cleaned pump parts should be easy to assemble. If this is not the case, check the parts for damage.

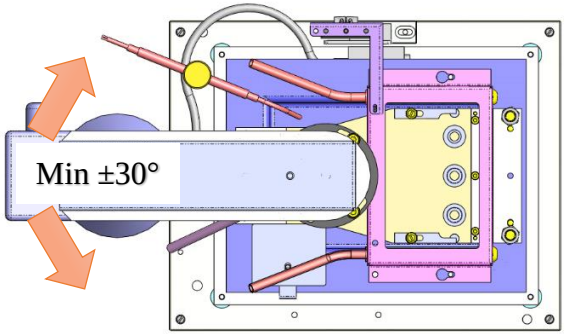

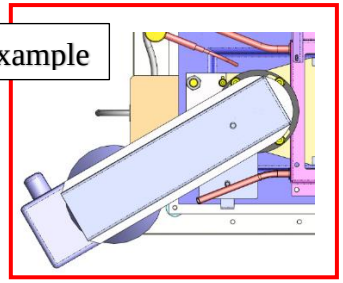

With the TS300 solder bath, it is possible to mount the pump drive turned against solder pan. This can be useful where space is tight.
The rotation is continuously variable in both directions. To do this, simply turn the support tube **[***2.19***]** to the required position before tightening the two cylinder head screws **[***2.26***]**.

Hirt Apparatebau (UG) recommends **silver paste** for all threaded connections that *may* come into contact with the solder.

Approx. **every 6 weeks**

Clean oxide from pan and temperature sensor

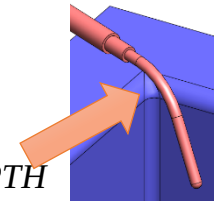

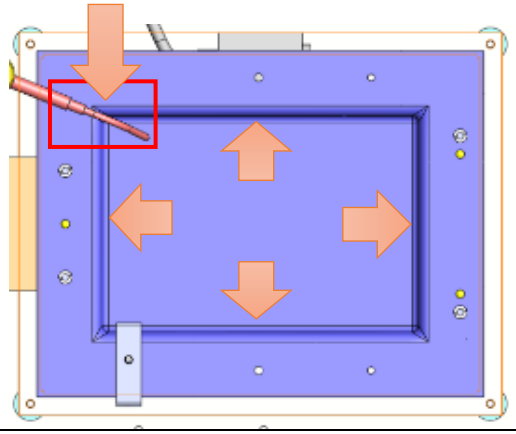

Figure 5

Clear all internal bath surfaces and the temperature sensor of oxide with a V2A-metal strip.
[*1.3, 1.4 and 1.5***]**
To do this, the pump drive and gas cover must be removed.

Reassemble in reverse order.

5. Bill of materials

Item	Description	ID Part Drawing Order Number:	Qty
1	**Solder pan** on base plate		1
1.1	Temperature sensor	10.006.017	1
1.2	Ceramic frame radiator	10.006.018	1
1.3	Slag tray / 100 x 200 x 15	10.006.020	1
1.4	Cleaning wire / 2 mm	10.006.021	1
1.5	Cleaning plate / 1.5 mm	10.006.022	1
1.6	TS 300 pan bath	10.003.303	1
1.7	Earthing plate	10.003.396	1
1.8	Guard plate	10.005.315	1
1.9	Splash guard	10.003.395	1
1.10	Threaded bushing	10.003.307	4
1.11	Housing	10.007.186	1
1.12	Housing foot	10.007.319	4
1.13	Base plate	10.007.190	1
1.14	Column for temperature sensor	10.007.307	1
1.15	M8 adjustable foot	10.006.066	4
1.16	Gassing hood	10.007.192	1
1.17	Gassing pipes without connector	10.007.194	2
1.18	Connection plug 	10.006.048	2
1.19	Connection plug + flow retardation coil 	10.006.049	1
1.20	Coupling socket with hose clip 	10.006.050	3
1.21	Cylinder head screw with slot for splash insert / clamping claw (stainless steel)	ISO 1207 - M5x20 (DIN 84)	2

Item	Description	ID Part Drawing Order Number:	Qty
1.22	Flat head screw with slot (stainless steel) for gas hood	ISO 1580 - M5x8 (DIN 85)	2
1.23	Flat head screw with hexagon socket for gas pipes	ISO 7380 - M8x10	2
2	**Pump drive / TS 300**		1
2.1	Drive motor	IEC standard motor / SKG 56-4B	1
2.2			
2.3	Pulley (drive side)	10.003.352	1
2.4	Pulley (turbine side)	10.008.511	1
2.5	Rotation sensor 	10.006.025	1
2.6	Drive belt	F-0 460x10	1
2.7	4-blade turbine / (coated)	10.008.502	1
2.8	Ceramic ball bearing / (for turbine shaft)	10.006.062	2
2.9	Tensioning unit consisting of (1 lever, 2 ball bearings 625, 2 adjusting washers)	10.003.391	1
2.10	Tension spring	01419	1
2.11	Heat shield plate	10.007.526	1
2.12	Belt cover	10.008.506	1
2.13	Connection plate	10.008.514	1
2.14	Sensor holder	10.008.512	1
2.15	Bearing flange	10.008.509	1
2.16	Spacer	10.008.507	1
2.17	Protective gas cover	10.008.505	1
2.18	Cage unit 2 mm / diagonal	10.003.316	1
2.19	Support tube	10.008.501	1
2.20	Bearing spacer	10.008.510	1
2.21	Flange bracket	10.008.508	1
2.22	Spring washer	10.003.393	1
2.23	Shaft retaining ring	DIN 472	2
2.24	Headless pin (1) with hexagon socket (turbine shaft)	ISO 4027-M5x8 (DIN914)	1
2.25	Headless pin (2) with hexagon socket (turbine shaft)	ISO 4026-M5x6(DIN913)	1
2.26	Cylinder head screw with hex socket and coarse thread (stainless steel)	ISO 4762-M6x180 (DIN912)	2
2.27	Adjusting washer	DIN 988-6-05	2
2.28	Adjusting washer	DIN 988-8-1	1

Item	Description	ID Part Drawing Order Number:	Qty
3	**Channel complete** TS300-TA100 (corresponds to an exchange channel)	10.003.373	1
3.1	Channel (welded assembly)	10.003.396	1
3.2	Channel carrier 1 pump side	10.003.311	1
(3.1 and 3.2 form the titanium part of 10.003.373)			
3.3	Channel carrier 2 nozzle side	10.003.305	1
3.4	Channel carrier 2 pump side	10.003.310	1
3.5	Left clamping claw left	10.003.378	1
3.6	Right clamping claw	10.003.379	1
3.7	Pump clamp ring	10.003.326	1
3.8	Threaded bushing M10x1xØ5.2	10.003.306	2
3.9	Threaded bushing M10x1xØ5.8	10.003.308	2
3.10	Flat stainless steel nut M10x1		4
3.11	Centring ring Ø7xØ5.2x3		2
Standard parts			
3.12	Cylinder head screw with hex socket and coarse thread (stainless steel)	ISO 4762-M4x16 (DIN 912)	3
3.13	Cylinder head screw with hex socket and coarse thread (stainless steel)	ISO 4762-M4x14 (DIN 912)	3
3.14	Cylinder head screw with hex socket and coarse thread (stainless steel)	ISO 4762-M6x25 (DIN 912)	4
3.15	Flat head screw with slot (stainless steel)	ISO 1580 – M5x20 (DIN 85)	2
3.16	Stainless steel screw	ISO 4017-M6x10 (DIN 933)	4
3.17	Washer without chamfer form A (stainless steel)	ISO 7089 - Ø6.4 (DIN 125)	4
3.18	Washer without chamfer form A (stainless steel)	ISO 7089 - Ø4.3 (DIN 125)	3
3.19	Washer without chamfer form A (stainless steel)	ISO 7089 - Ø5.3 (DIN 125)	2
3.20	Adjusting washer	DIN 988 -Ø6x0.5	4
3.21	Adjusting washer	DIN 988 - Ø6x0.2	8
3.22	Adjusting washer	DIN 988 - Ø6x0.1	4
3.23	Hardened cylinder pin	ISO 8734 - Ø3x12 (DIN 6325)	4

4	**Gas fitting saver circuit**		
4.1	Digital flow switch 50L 	10.006.026	2
4.2	Single valve 	10.006.027	2

Item	Description	ID Part Drawing Order Number:	Qty

Example for Soldering input / Soldering tools

5	**Splash insert** 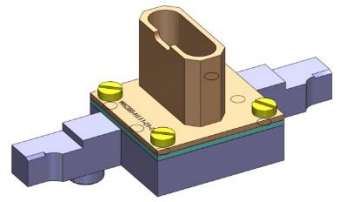		
5.1	Splash insert base body 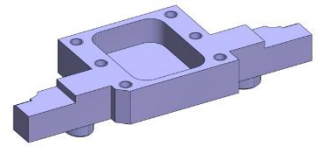	x	-
5.2	Drain ramp 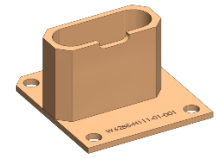	x	-
5.3	Choke plate 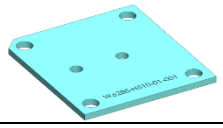	x	-
5.4	Nozzle unit complete	x	-
5.4.1 – 5.4.12 are the individual parts of assembly 5.4 nozzle unit complete			
5.4.1	Nozzle base plate	x	-
5.4.2	Nozzle base body	x	-
5.4.3	Nozzle rear panel	x	-
5.4.4	Nozzle cover	x	-
5.4.5	Wave stabiliser	x	-
5.4.6	Hardened cylinder pin (stainless steel)	ISO 8734– Ø3x12 (DIN 6325)	-
5.4.7	Cylinder head screw with slot (stainless steel)	ISO 1207 – M5x10 (DIN 84)	-
5.4.8	Headless pin with hexagon socket (stainless steel)	ISO 4026-M3x10 (DIN 913)	-
5.4.9	Cylinder head screw with hexagon socket and coarse thread (stainless steel)	ISO 4762-M2x10 (DIN 912)	-
5.4.10	Washer without chamfer form A (stainless steel)	DIN 125-Ø2.2	-
05.04.11	Stainless steel countersunk screw M2x6	DIN 965 H	-
05.04.12	Hardened cylinder pin (stainless steel)	ISO 8734 - Ø2x6 (DIN 6325)	-

6	**Hood complete** 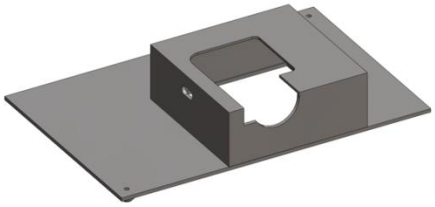	x	-
6.1	Hood base	x	-
6.2	Hood cover	x	-
6.3	Hood cover mounting	x	-
6.4	Cylinder head screw with slot (stainless steel)	ISO 1207 – M4x8 (DIN 84)	-
6.5	Stainless steel nut	ISO 8673-M4 (DIN 934)	-

6. EC Declaration of Incorporation

The manufacturer: **Hirt** Apparatebau (UG)
Wilhelm-Jerger-Straße 22
D-78078 Niedereschach
Phone: +49 7728-6447-0

hereby declares that the following product:

Product name:	Solder bath
Type designation:	TS 300/TA100
Serial number:	----
Year of manufacture:	----

meets the following essential requirements of the **Machinery Directive (2006/42/EC)**:
Annex I, Articles 1.1.2, 1.1.3, 1.1.5, 1.3.2, 1.3.3, 1.3.4 and 1.5.1.

The partly completed machinery is also in conformity with all provisions of the **Electrical Equipment (2006/95/EC)** and **Electromagnetic Compatibility (89/336/EEC)** directives.

The following harmonised norms were applied:

DIN EN ISO 12100	Safety of machinery – General principles for design - Risk assessment and risk reduction
DIN EN 60204-1	Safety of machinery – Electrical equipment of machines, Part 1: General requirements

The partly completed machinery must not be put into operation until it has been established that the machine into which the partly completed machinery is to be installed is in compliance with Machinery Directive 2006/42/EC.

The manufacturer undertakes to provide by electronic transfer the documentation specific to the partly completed machinery required by national authorities if requested for good reason to do so.
The specific technical documentation defined in Annex VII, Part B has been created.
Name of Documentation Manager: Tanja Class
Address of Documentation Manager: See manufacturer's address

Niedereschach,

Joachim Hirt, Manager Director

Date Signatory and signatory details Signature